Ground floor plan

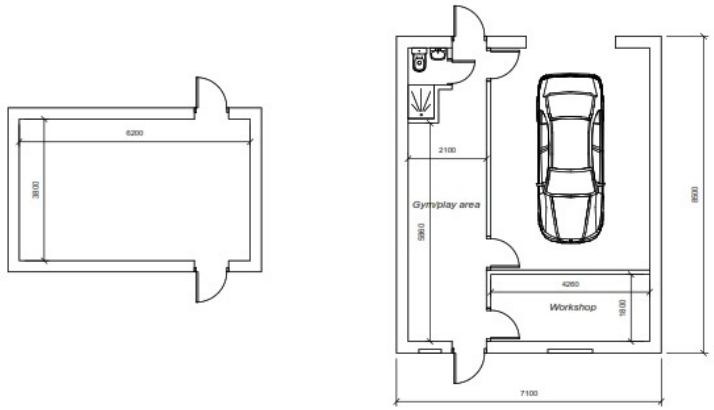

Existing

Proposed

Scale 1:100 @A3

0 1 2 3 4 5 10 20

CONDITIONS

Plans are designed before building work commences.
Only take figured dimensions from this drawing, do not scale from it.
Dimensions to be checked on site prior to works, with discrepancies reported to client immediately.
All materials used in external construction to match existing.
THIS DRAWING IS THE COPYRIGHT OF THE CLIENT AND MAY NOT BE REPRODUCED IN PART OR WHOLE WITHOUT PRIOR PERMISSION FROM THE CLIENT

NOTES

External floor area:
60m^2

Site address:
50 Tybenham Road
London
SW19 3LA

Scale:
1:100

Client:
Raj Khuman

Date:
30/05/2020

Sheet number:
1/8

Filename:
50 Tybenham

This page is intentionally left blank